Mecmesin
testing to perfection

Assisted-Pull Peel Table

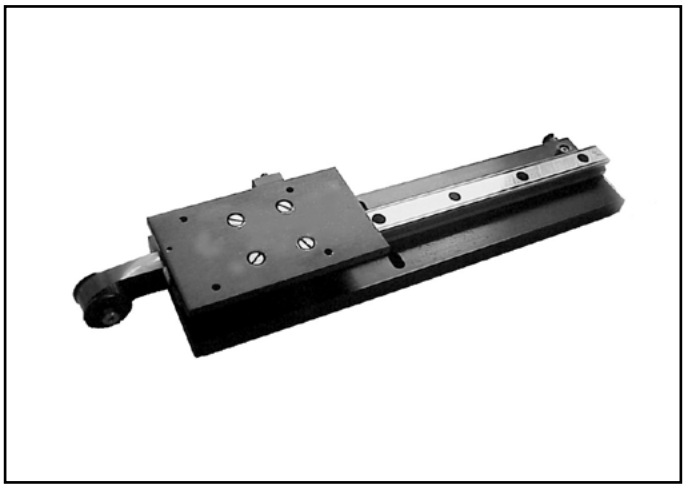

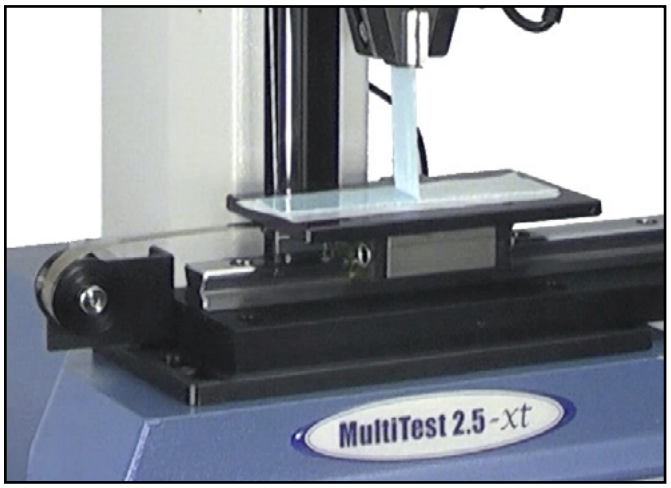

Description

The assisted-pull peel table is fixed to the anvil plate and the crosshead of a test stand. The carriage of the peel table is directly driven horizontally by the vertical movement of the test stand crosshead, maintaining a constant 90 degree peel angle for the specimen.

Applications

Used for peel testing of:
- adhesive tapes
- packaging
- flexible laminates

Specifications

Part No.	Load Capacity			Length		Width		Height		Weight	
432-051	500 N	50 kgf	110 lbf	397 mm	15.60"	100 mm	3.94"	58mm	2.28"	3.5 kg	7.7 lb

Dimensions mm

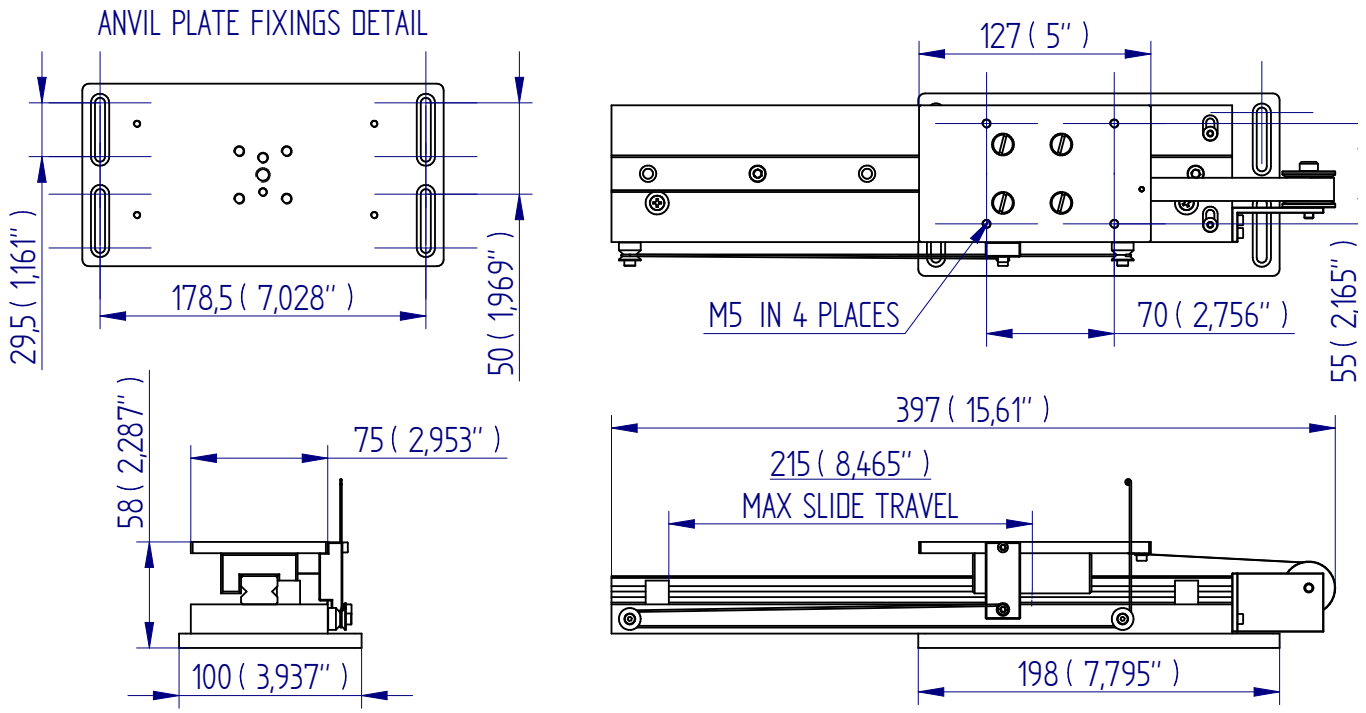

FS 58553

Mecmesin reserves the right to alter equipment specifications without prior notice.
E&OE

DISTRIBUTOR STAMP

Head Office - UK
Mecmesin Limited
w: www.mecmesin.com
e: sales@mecmesin.com

France
Mecmesin France
w: www.mecmesin.fr
e: contact@mecmesin.fr

Germany
Mecmesin GmbH
w: www.mecmesin.de
e: info@mecmesin.de

North America
Mecmesin Corporation
w: www.mecmesincorp.com
e: info@mecmesincorp.com

Asia
Mecmesin Asia Co., Ltd
w: www.mecmesinasia.com
e: sales@mecmesinasia.com

China
Mecmesin (Shanghai) Pte Ltd
w: www.mecmesin.cn
e: sales@mecmesin.cn